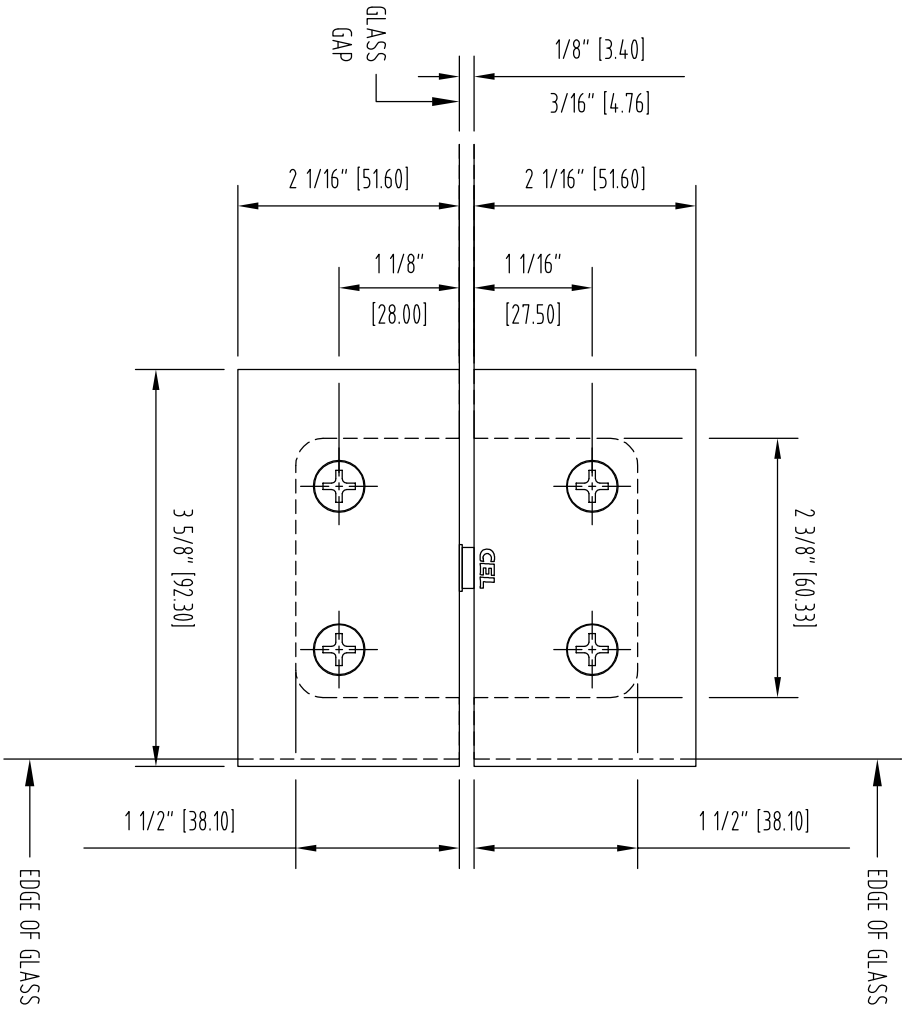
GLASS GAP
1/8" [3.40]
3/16" [4.76]
2 1/16" [51.60]
2 1/16" [51.60]
1 1/8"
[28.00]
1 1/16"
[27.50]
3 5/8" [92.30]
2 3/8" [60.33]
1 1/2" [38.10]
1 1/2" [38.10]
EDGE OF GLASS
EDGE OF GLASS

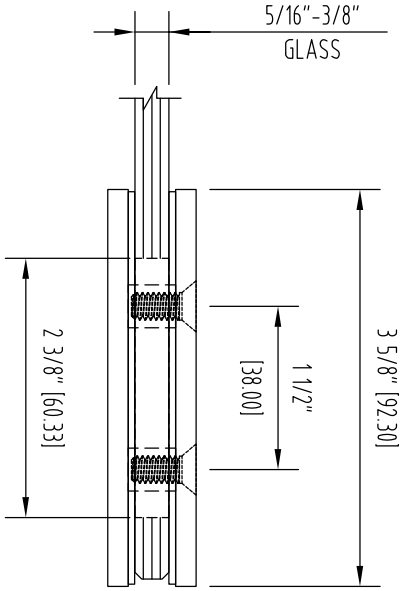
5/16"-3/8"
GLASS
2 3/8" [60.33]
1 1/2"
[38.00]
3 5/8" [92.30]

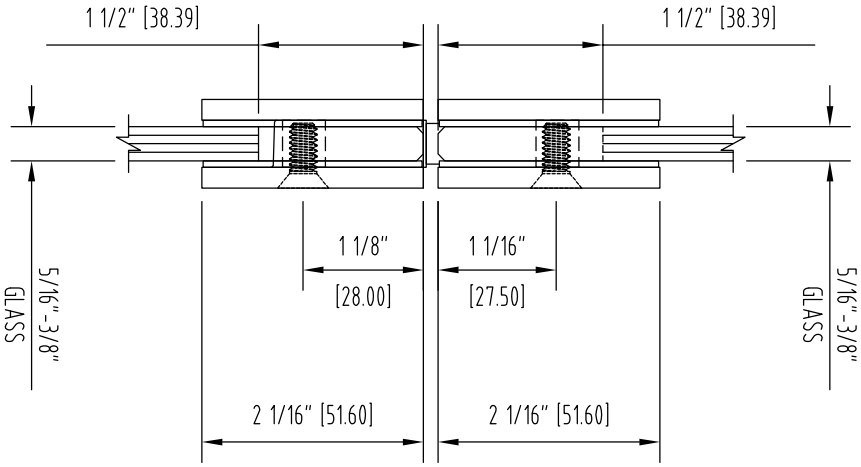
1 1/2" [38.39]
1 1/2" [38.39]
1 1/8"
[28.00]
1 1/16"
[27.50]
5/16"-3/8"
GLASS
5/16"-3/8"
GLASS
2 1/16" [51.60]
2 1/16" [51.60]

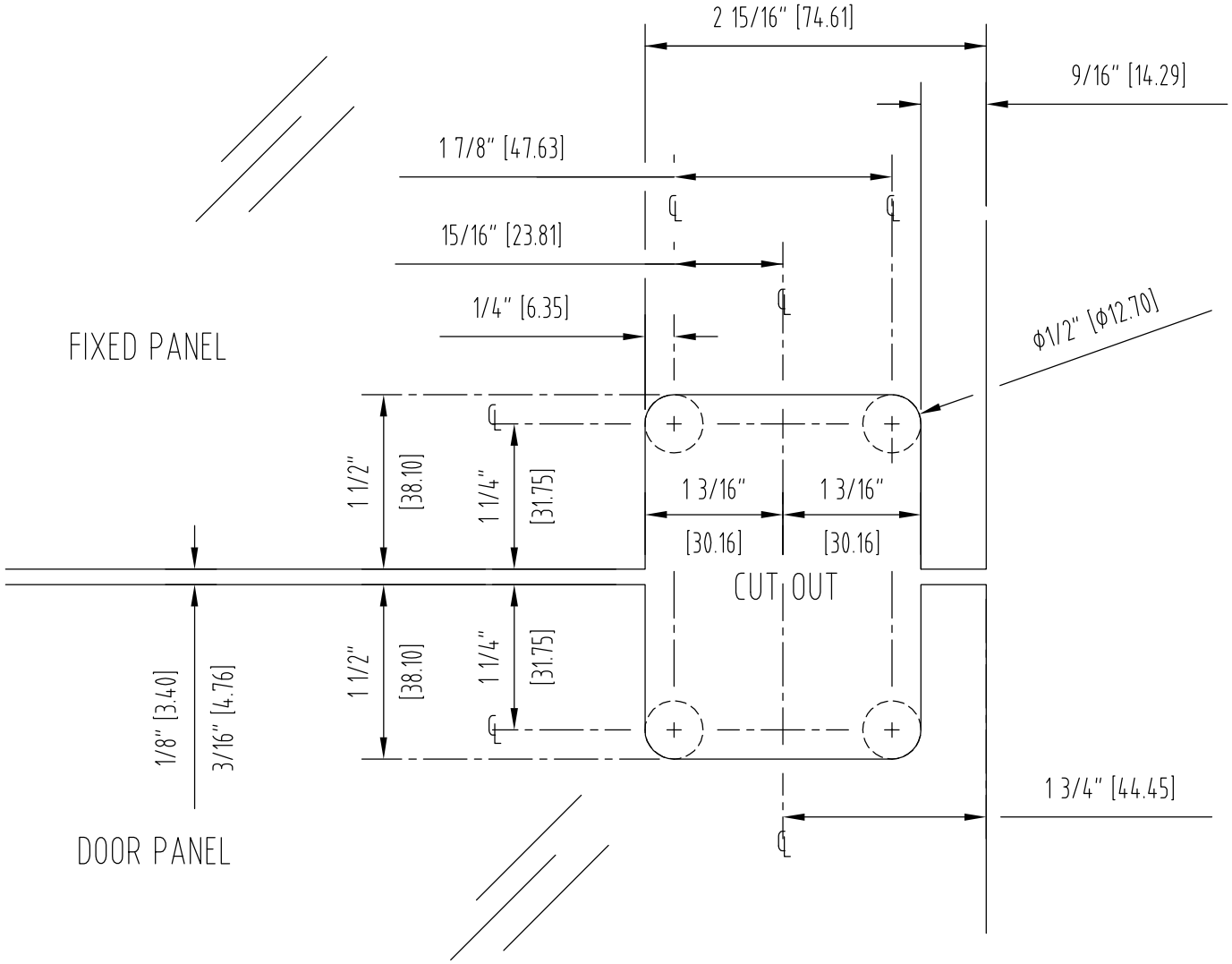

EDGE MOUNT PREFERRED METHOD 1/8" (3mm) TO 3/16" (5mm) CLEARANCE

GLASS FABRICATION TEMPLATE