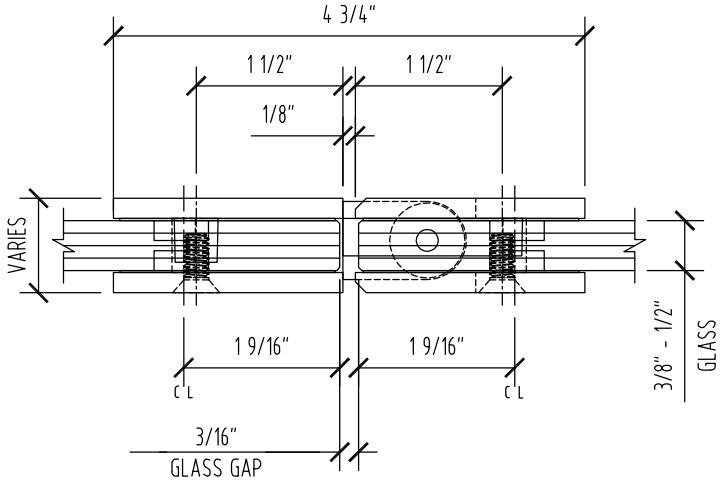

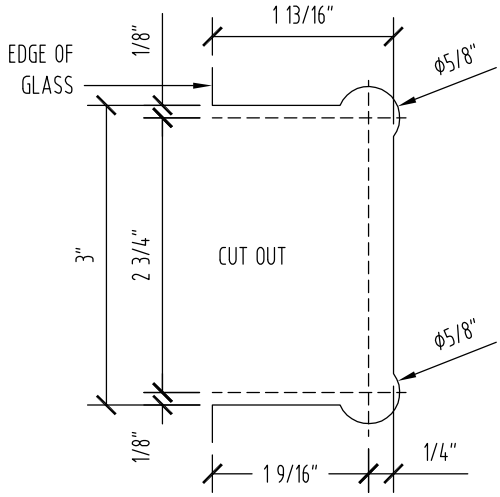
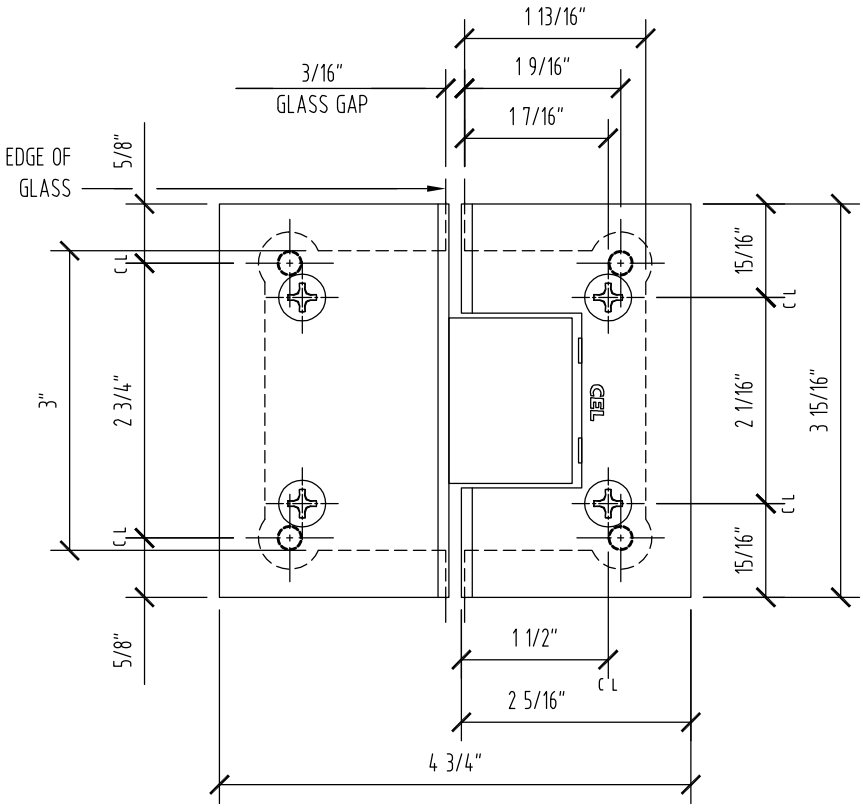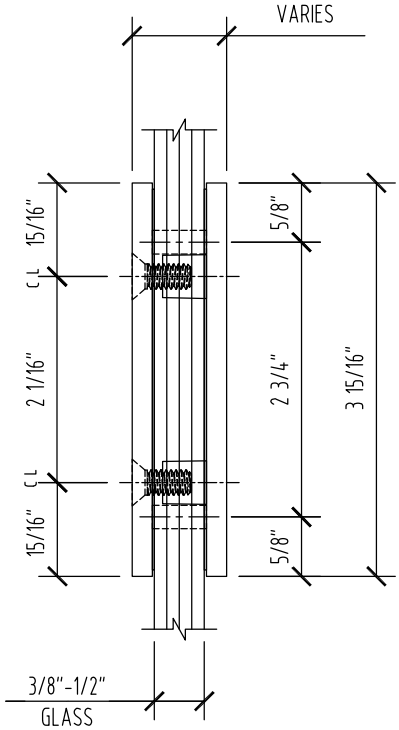
TEMPLATE FOR DOOR AND
FIXED PANEL ARE THE SAME