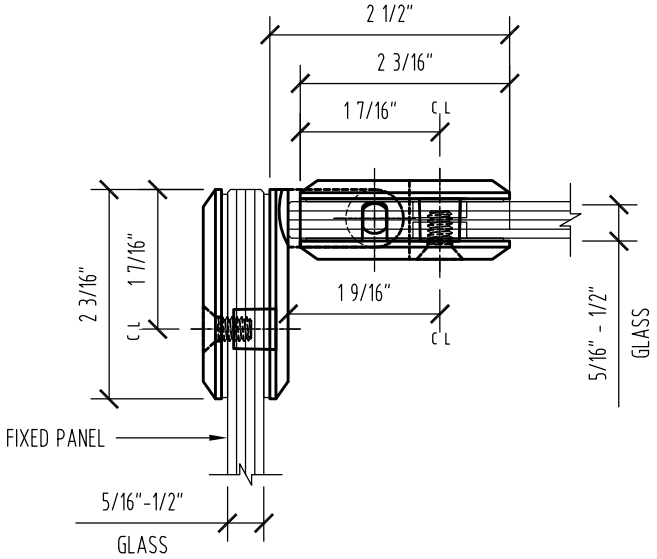

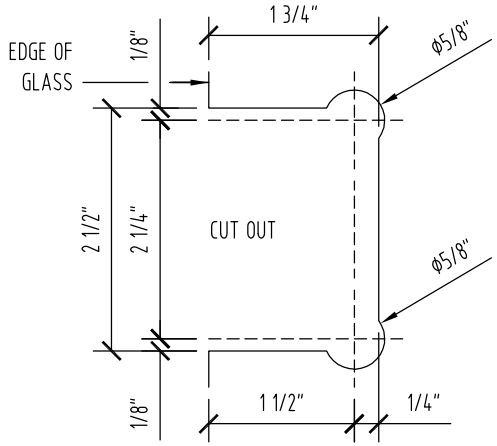

GLASS FABRICATION TEMPLATE DOOR

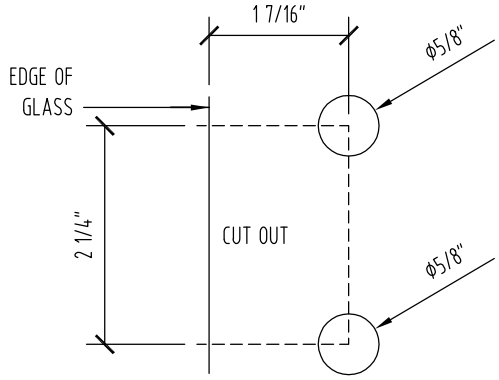
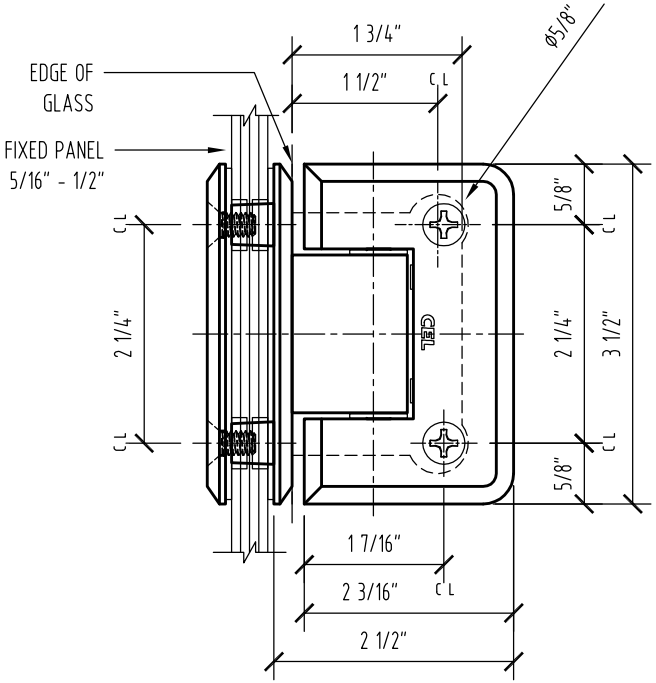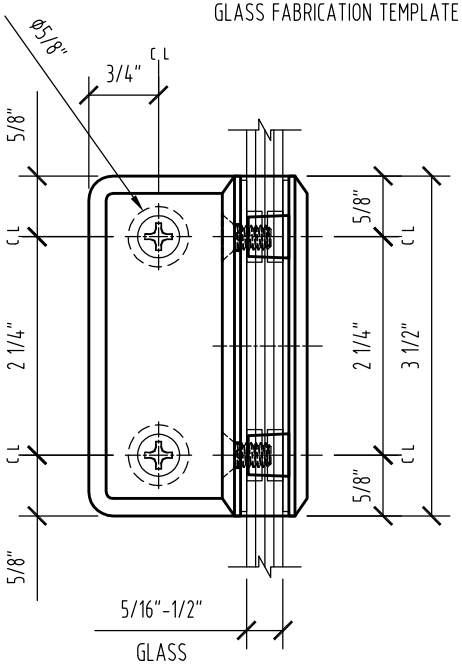
GLASS FABRICATION TEMPLATE FIXED PANEL