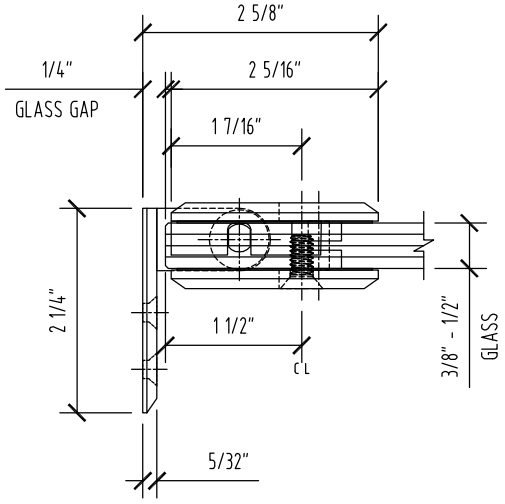

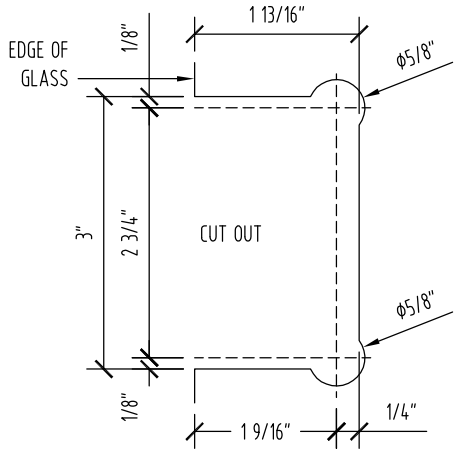
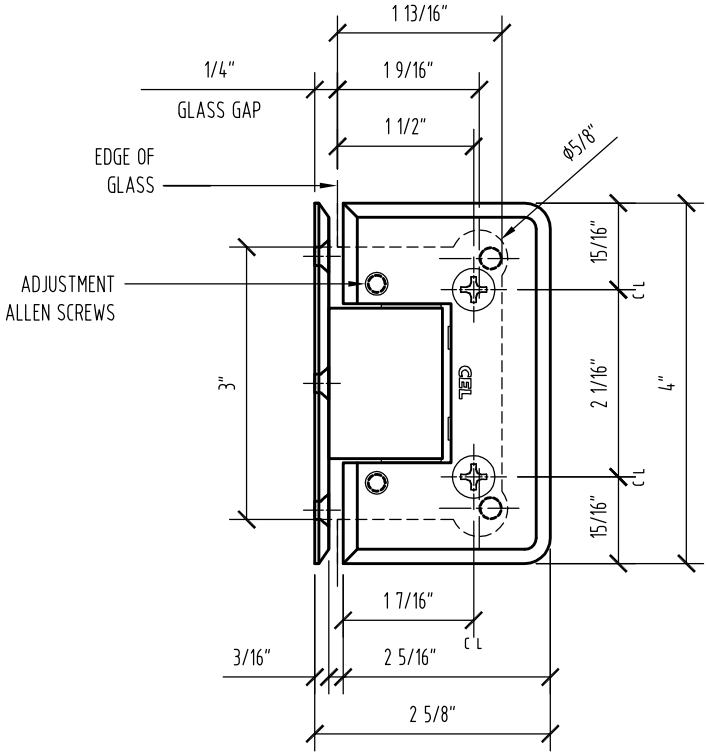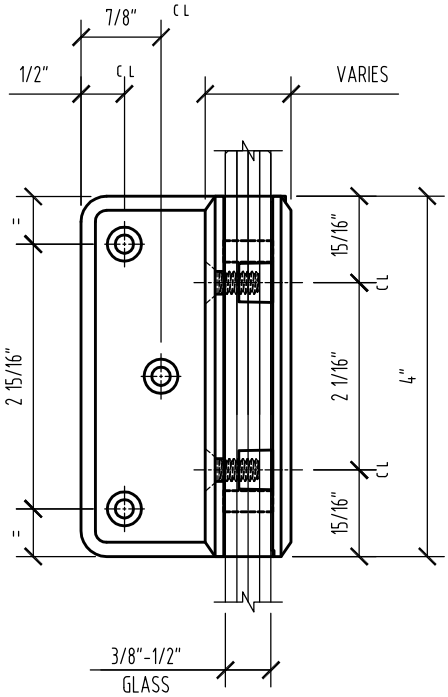
GLASS FABRICATION TEMPLATE